ECO	REV	VER	DESCRIPTION	DATE
EC-247	B	-	ADJUST PRESS-IN DIAMETER & MATCH REVISION - CHG APPL	09/03/2010
10777		1	TITLE BLOCK UPDATED.	19-DEC-2018

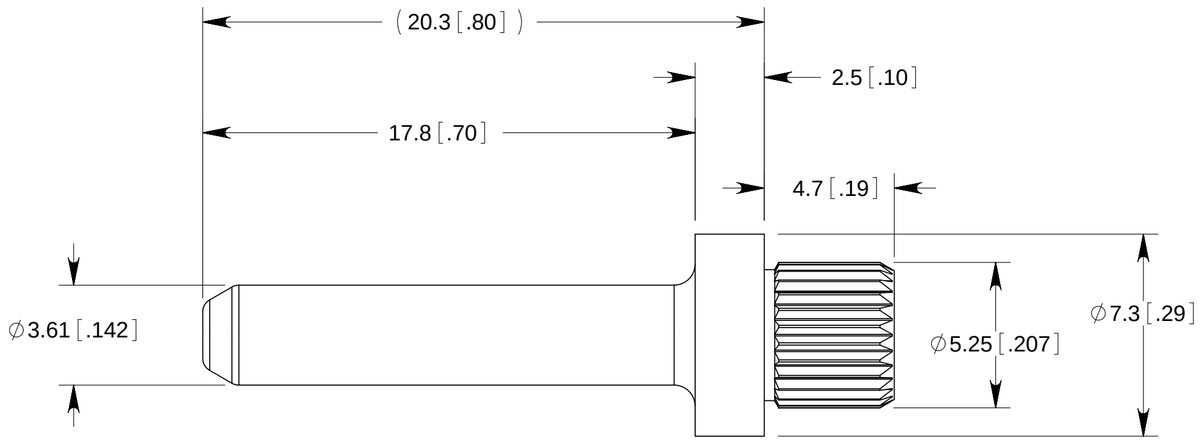

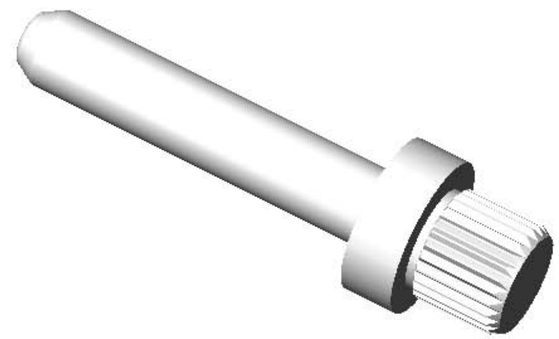

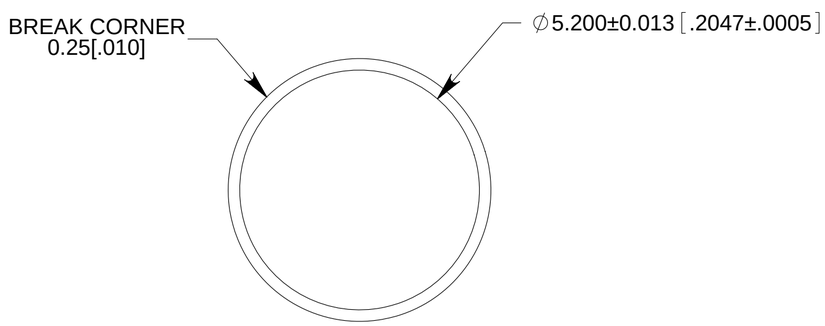

PRESS-FIT
NOMINAL 0.05[.002] DIAMETER INTERFERENCE
SUGGESTED FOR COPPER BUS INSTALLATION

NOTES: UNLESS OTHERWISE SPECIFIED

1. CONTACT NAME AND PART NUMBER:
   NAME: CONTACT, PIN SIZE 3.6 MM, PRESS-FIT KNURL
   PART NUMBER: 9104-06643-02104
2. MATERIALS: COPPER ALLOY
3. FINISHES: SILVER PLATING OVER NICKEL UNDER PLATING
4. REFERENCE DIMENSIONS IN PARENTHESIS (X.XX) ARE WITHOUT TOLERANCE AND USED FOR INFORMATION ONLY.

THIRD ANGLE PROJECTION

TOLERANCES
UNLESS OTHERWISE SPECIFIED
DIMENSIONS ARE IN MILLIMETERS
TOLERANCES ARE:

DECIMALS		ANGLES
X.X	± 0.2	± 2.0
X.XX	± 0.08	
X.XXX	± 0.013	

SURFACE FINISH: N/A

	NAME	DATE
ORIG:	R. Larsen	08/24/2009
ENGR:	R. Larsen	08/24/2009
CHECKED:	H. Han	08/24/2009

PROPRIETARY AND CONFIDENTIAL NOTICE
ALL INFORMATION IN THIS DRAWING IS CONFIDENTIAL AND PROPRIETARY INFORMATION AND IS NOT TO BE DISTRIBUTED, COPIED, OR SHARED EXCEPT WITH PRIOR WRITTEN APPROVAL OF METHODE ELECTRONICS, INC. POWER SOLUTIONS GROUP.

METHODE ELECTRONICS, INC.
POWER SOLUTIONS GROUP
2025 Gateway Pl. #235, San Jose, CA 95110 (408) 453-9500

TITLE: **USER DRAWING, CONTACT, PIN**
PB SIZE 3.6MM
STRAIGHT KNURL

SIZE	DRAWING NUMBER:	REV
C	C9104-06643-02104	B

SCALE: 6:1 | FILENAME: 9104-06643-02104 | SHEET 1 OF 1